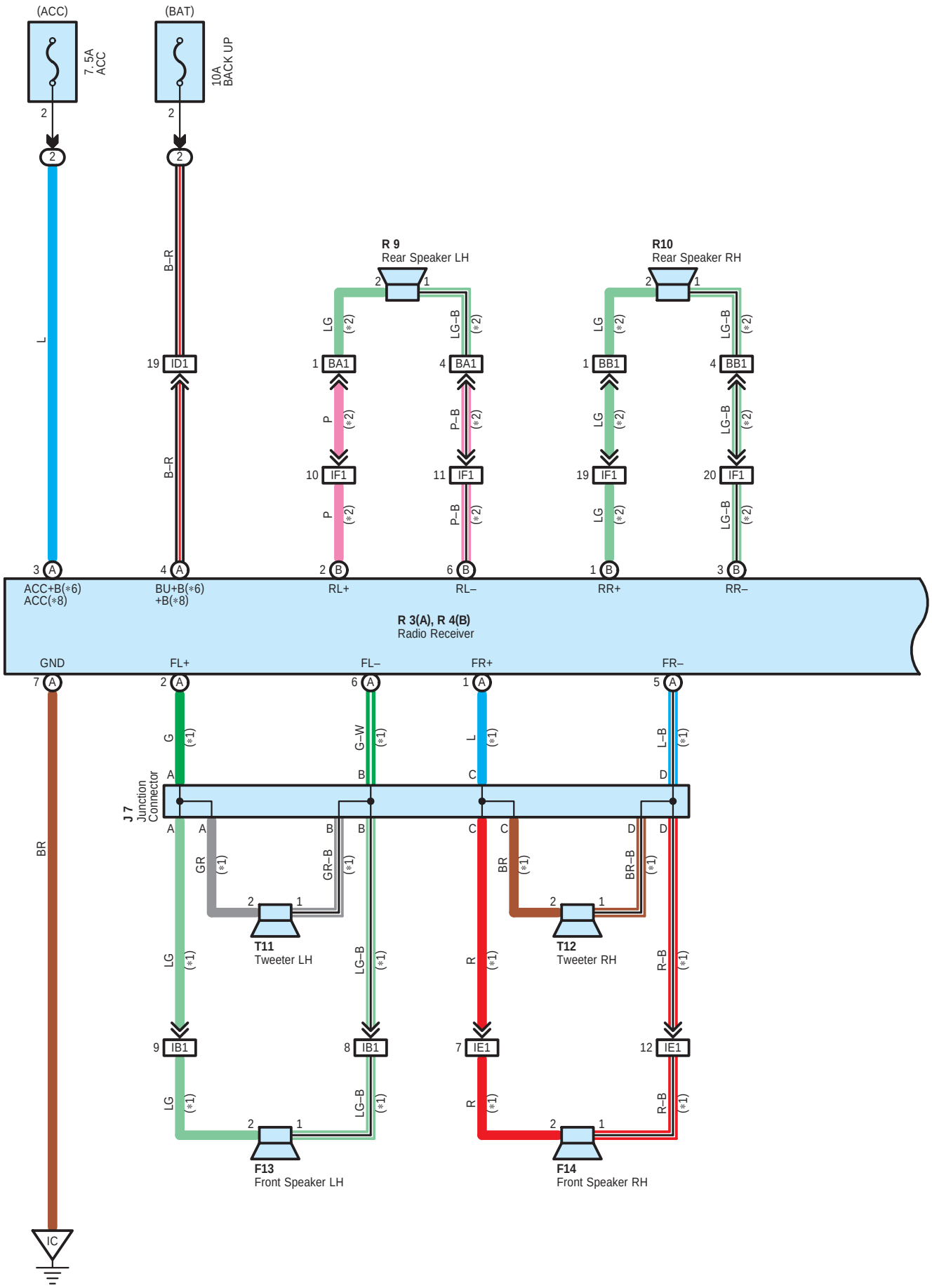
(ACC)
7.5A ACC
(BAT)
10A BACK UP
R 9
Rear Speaker LH
R10
Rear Speaker RH
ID1
BA1
BB1
IF1
ACC+B(*6)
ACC(*8)
BU+B(*6)
+B(*8)
RL+
RL–
RR+
RR–
R 3(A), R 4(B)
Radio Receiver
GND
FL+
FL–
FR+
FR–
J 7
Junction Connector
T11
Tweeter LH
T12
Tweeter RH
IB1
IE1
F13
Front Speaker LH
F14
Front Speaker RH
IC

∗ 1 : 6 Speaker
∗ 2 : 4 Speaker, 6 Speaker
∗ 3 : 2 Speaker, 4 Speaker
∗ 6 : w/o CD Player
∗ 8 : w/ CD Player

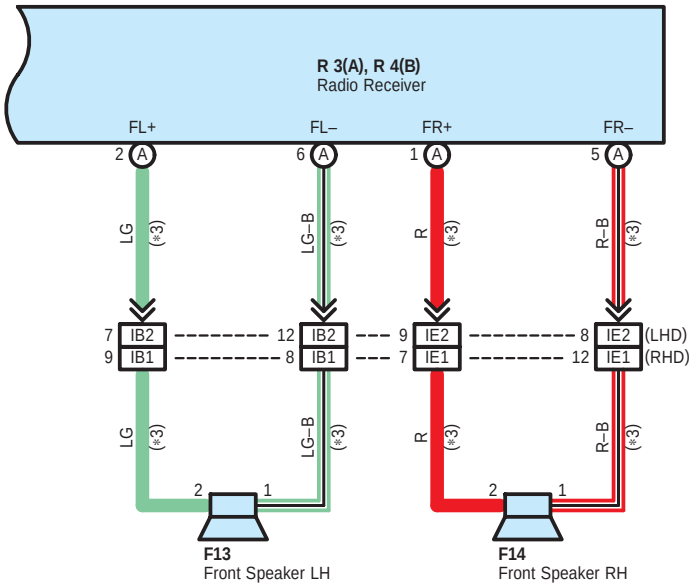

○ : **Parts Location**

Code	See Page	Code	See Page	Code	See Page
F13	30 (LHD)	R3 A	37 (*5)	R9	41 (RHD)
	40 (RHD)		39 (*6)	R10	31 (LHD)
F14	30 (LHD)	R4 B	29 (LHD)		41 (RHD)
	40 (RHD)		37 (*5)	T11	39 (*6)
J7	39 (*6)		39 (*6)	T12	39 (*6)
R3 A	29 (LHD)	R9	31 (LHD)		

⬭ : **Relay Blocks**

Code	See Page	Relay Blocks (Relay Block Location)
2	23 (LHD)	Fuse Block (Left Kick Panel)
	23 (RHD)	Fuse Block (Right Kick Panel)

▭ : **Connector Joining Wire Harness and Wire Harness**

Code	See Page	Joining Wire Harness and Wire Harness (Connector Location)
IB1	48 (*5)	Front Door LH Wire and Instrument Panel Wire (Left Kick Panel)
	49 (*6)	
IB2	44 (LHD)	
ID1	44 (LHD)	Engine Room Main Wire and Instrument Panel Wire (Right Kick Panel)
	48 (*5)	Engine Room Main Wire and Instrument Panel Wire (Cowl Side Panel RH)
	49 (*6)	
IE1	48 (*5)	Front Door RH Wire and Instrument Panel Wire (Right Kick Panel)
	49 (*6)	
IE2	44 (LHD)	
IF1	44 (LHD)	Instrument Panel Wire and Floor Wire (Left Kick Panel)
	48 (*5)	Instrument Panel Wire and Floor Wire (Right Kick Panel)
	49 (*6)	
BA1	45 (LHD)	Rear Door No.1 Wire LH and Floor Wire (Center Pillar LH)
	50 (RHD)	
BB1	45 (LHD)	Rear Door No.1 Wire RH and Floor Wire (Center Pillar RH)
	50 (RHD)	

▽ : **Ground Points**

Code	See Page	Ground Points Location
IC	44 (LHD)	Cowl Side Panel LH
	48 (*5)	Right Kick Panel
	49 (*6)	

* 1 : LHD 3SZ–VE * 2 : LHD K3–VE * 3 : RHD 3SZ–VE * 4 : RHD K3–VE * 5 : RHD w/ Heater * 6 : RHD w/o Heater